C1000

CAIRE®

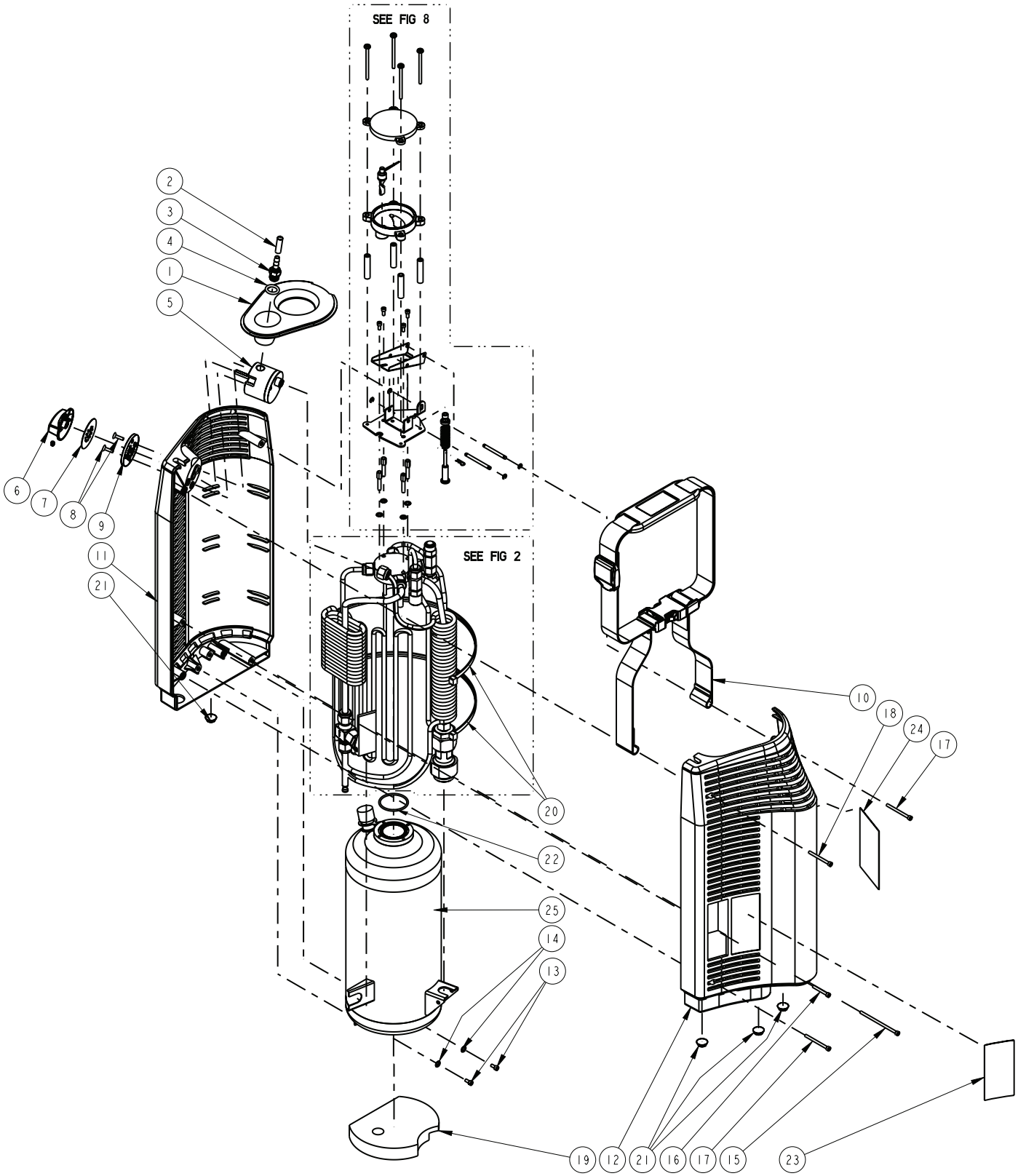

FIGURE 1: COMPANION 1000 EXPLODED VIEW

CAIRE®

Figure 1 Parts

Item Number	Description	Quantity	Bubble Seq No
B-775003-00	BEZEL, TOP, C1000 (BLUE)	1	1
B-775315-00	CAP, PORTABLE OUTLET	1	2
20592888	FITTING, BARBED 1/8" NPT	1	3
B-775094-00	O-RING OXYGEN OUTLET C-1000	1	4
B-775859-FLO	0-6 FCV	1	5
B-776168-00	KNOB-FCV (12 POSITION)	1	6
B-775834-00	0-6 FCV DECAL	1	7
20724438	SCREW, FH, 6-32 X 3/8", SS	2	8
B-775877-00	PLATE-FLOWLOCK (12 POSITION)	1	9
B-775097-00	STRAP, CARRYING	1	10
B-775001-00	COVER, SIDE A, Non-TPED	1	11
B-775534-00	COVER, SIDE A, TPED	1	11
21015481	COVER SIDE B	1	12
B-775005-00	SCREW, SHCS, 6-32 X 1/4", SS	2	13
B-775318-00	LOCKWASHER, #6 INTERNAL	2	14
B-775008-00	SCREW, SHCS, 6-32 X 2-1/4", SS	1	15
B-775007-00	SCREW, SHCS, 6-32 X 1-3/8", SS	4	16, 17 , 18
B-775092-00	PAD, MOISTURE CONTROL, C-1000	1	19
CA403730	COIL STRAP	2	20
B-775010-00	RUBBER FEET	4	21
B-775037-00	O-RING MANIFOLD SEAL	1	22

Item Number	Description	Quantity	Bubble Seq No
* See Note	LABEL, Warning, (FOR USE WITH NON-TPED UNIT)	1	23
* See Note	CE LABEL (FOR USE WITH TPED UNIT)	1	23
* See Note	LABEL, WARNING ("UP ARROW" FOR USE WITH NON-TPED UNIT)	1	24
* See Note	PORTABLE WARNING LABEL (WITH WARNING FIGURE, FOR USE WITH TPED UNIT)	1	24
B-702097-SV	DEWAR	1	25

* Note: Reference Service Bulletin 21174579

Figure 2 Parts

Item Number	Description	Quantity	Bubble Seq No
B-776436-00	MANIFOLD ASSEM,F/ W(C-1000/TUV)	1	1

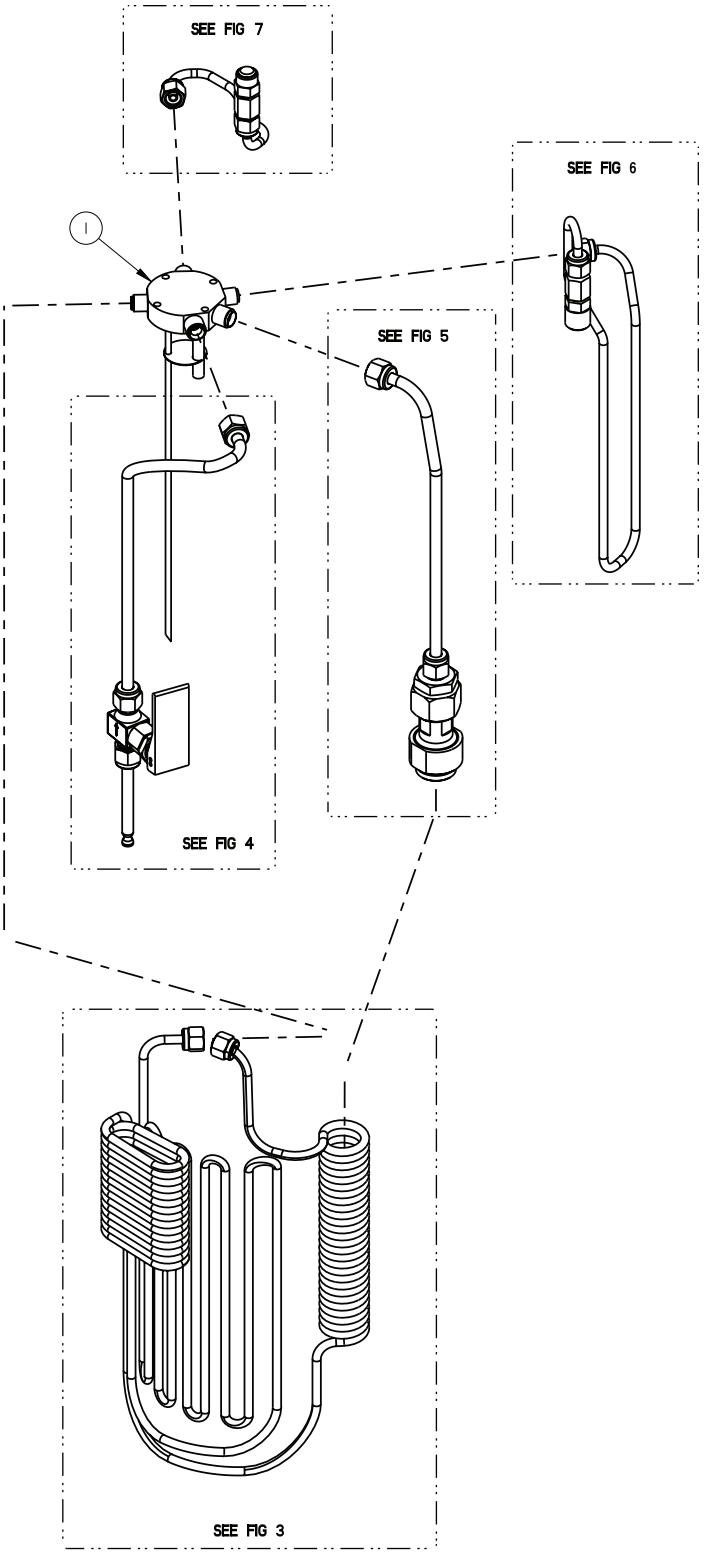

FIGURE 2: MANIFOLD EXPLODED ASSEMBLY

Figure 3 Parts

Item Number	Description	Quantity	Bubble Seq No
B-776869-SV	TUBE, WARMING COIL #1, C-T	1	1
B-775067-00	NUT,3/16 TUBE, ALUMINUM	2	2
B-775068-00	FERRULE,3/16" TUBE, BRASS	2	3

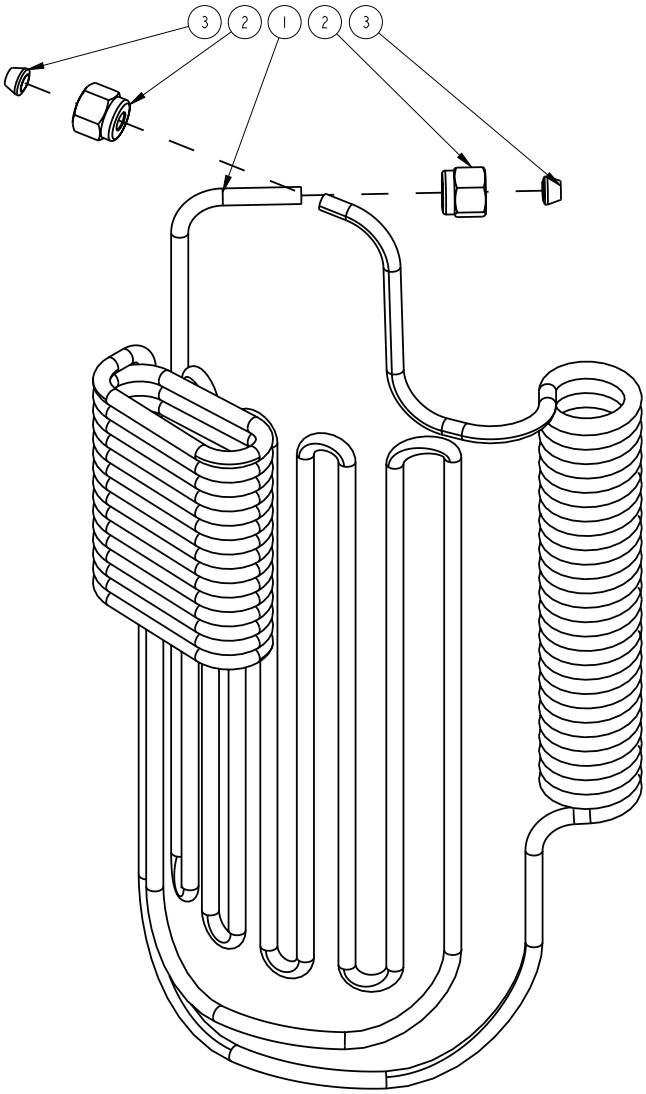

FIGURE 3: WARMING COIL / EXPANSION LINE EXPLODED ASSEMBLY

Figure 4 Parts

Item Number	Description	Quantity	Bubble Seq No
B-775063-00	FERRULE,1/4" TUBE, BRASS	3	1
B-775062-00	NUT, 1/4" TUBE, ALUMINUM	3	2
B-775086-SV	TUBE,VENT-TO-FILL	1	3
B-775087-00	TOGGLE, VENT-TO-FILL	1	4
B-775084-SV	TUBE, EXTENSION, VENT-TO-FILL	1	5
B-701303-00	SPRING LEVER TENSIONING	1	6
B-775088-00	SPACER VENT-TO-FILL	1	7
B-775089-00	PIN, VENT-TO-FILL	1	8
B-775004-00	LEVER, VENT-TO-FILL	1	9
B-776439-00	LEVER, VENT-TO-FILL (TPED)	1	9
B-775243-00	ASSY, VENT TO FILL	1	10

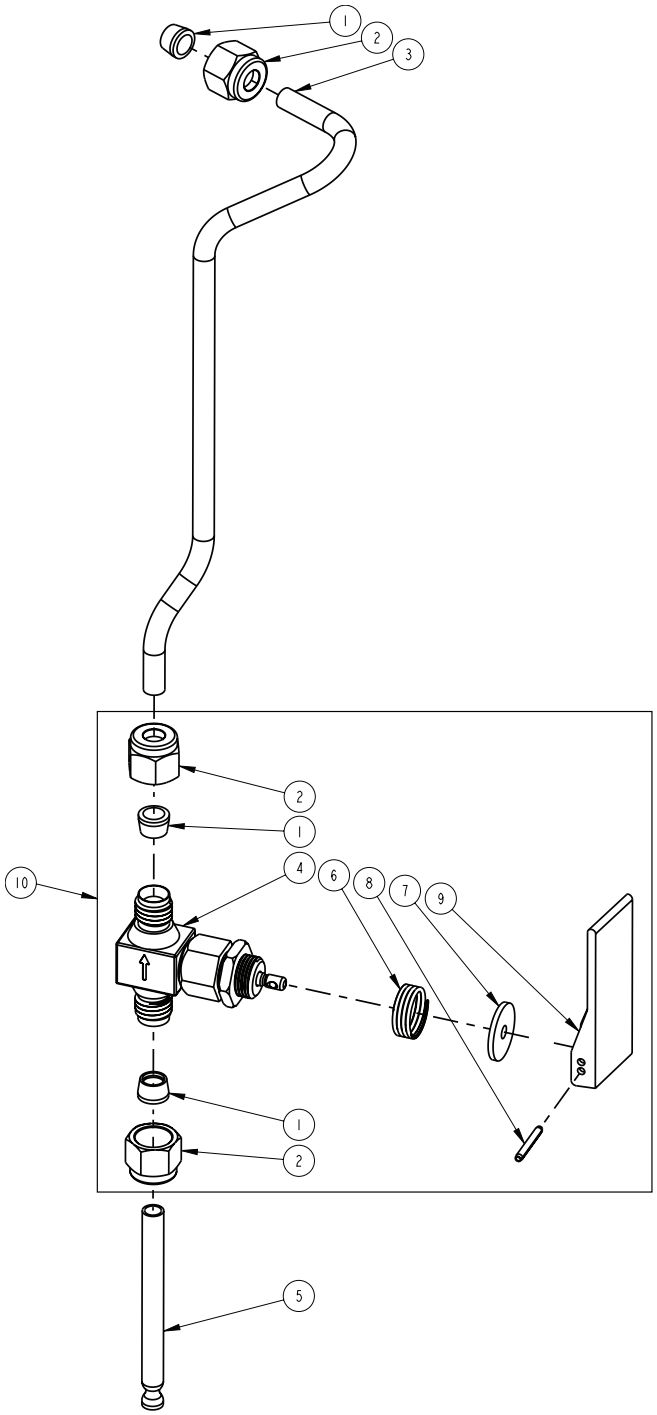

FIGURE 4: VENT VALVE EXPLODED ASSEMBLY

Figure 5 Parts

Item Number	Description	Quan-tity	Bubble Seq No
B-775063-00	FERRULE,1/4" TUBE, BRASS	2	1
B-775062-00	NUT, 1/4" TUBE, ALUMINUM	2	2
B-775061-SV	TUBE, FILL, 1/4"	1	3
20553107	QUICK CONNECT ASSY. FEMALE	1	4
B-775261-00	Jam Nut, Female Adaptor	1	5
B-775263-00	Female Adaptor	1	6
10656071	Seal, Female Adaptor	1	7
B-775260-00	Lip Seal	1	8
10665313	Lip Seal Retainer Sleeve	1	9

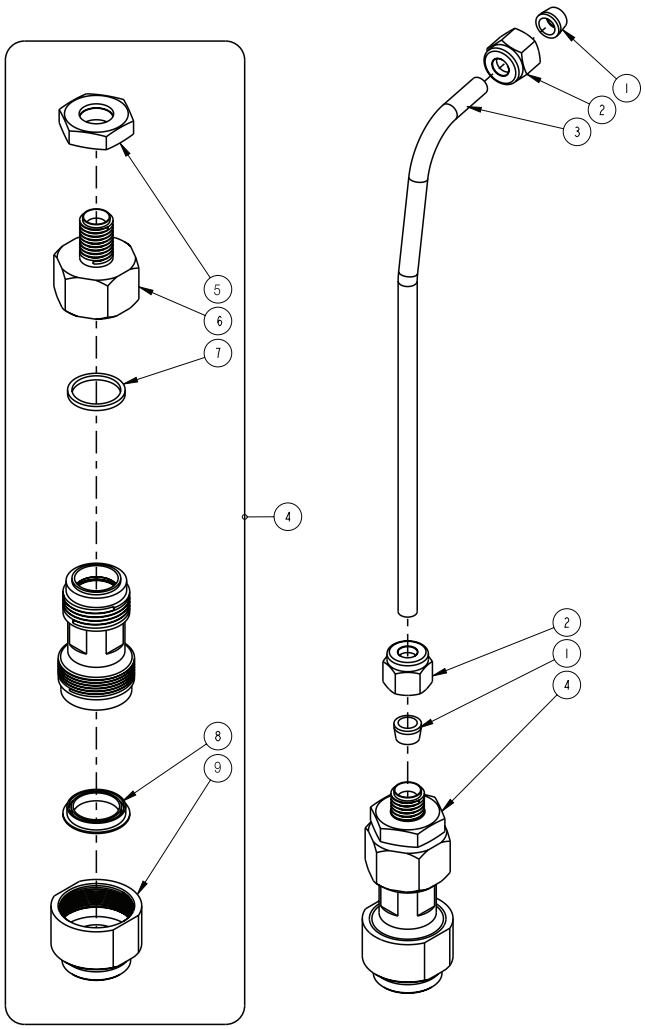

FIGURE 5: FEMALE FILL CONNECTOR EXPLODED ASSEMBLY

Figure 6 Parts

Item Number	Description	Quantity	Bubble Seq No
B-775068-00	FERRULE,3/16" TUBE, BRASS	2	1
B-775067-00	NUT,3/16 TUBE, ALUMINUM	2	2
B-776817-SV	TUBE, PRIMARY R. V.	1	3
B-775078-00	FITTING, RELIEF VALVE	1	4
B-776892-00	PRIMARY RELIEF VALVE (22 PSI)	1	5
B-776827-00	SILENCER, RELIEF VALVE	1	6

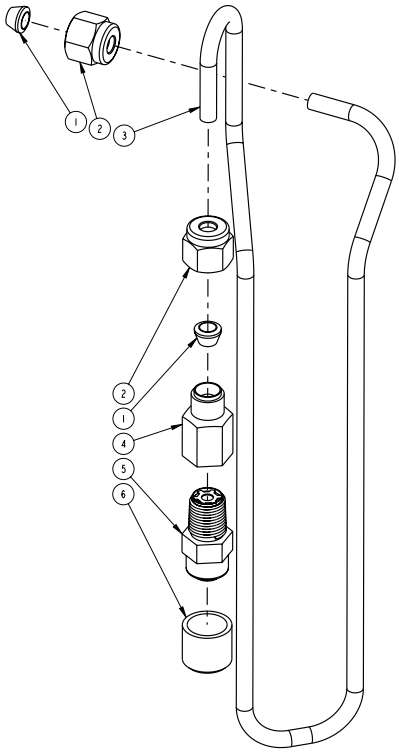

FIGURE 6: PRIMARY RELIEF VALVE CIRCUIT EXPLODED ASSEMBLY

Figure 7 Parts

Item Number	Description	Quantity	Bubble Seq No
B-775082-00	VALVE, SECONDARY RELIEF, 30PSI	1	1
B-775078-00	FITTING, RELIEF VALVE	1	2
B-775068-00	FERRULE, 3/16" TUBE, BRASS	2	3
B-775067-00	NUT, 3/16 TUBE, ALUMINUM	2	4
B-775081-SV	TUBE, SECONDARY RELIEF	1	5

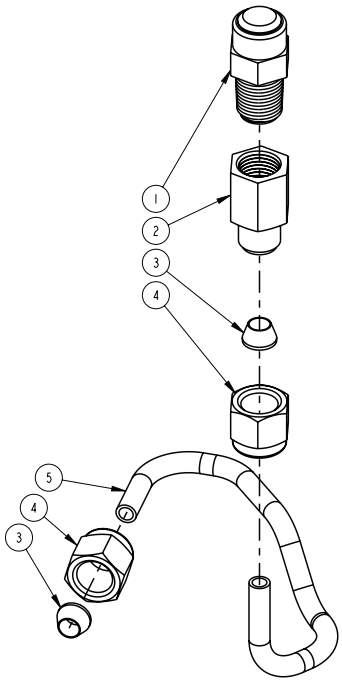

FIGURE 7: SECONDARY RELIEF VALVE CIRCUIT EXPLODED ASSEMBLY

Figure 8 Parts

Item Number	Description	Quantity	Bubble Seq No
B-775029-00	SCREW - HARDWARE	4	1
B-775242-SV	Contents Indicator Body (Includes parts 3 and 4)	1	2
B-775012-00	LENS, WEIGHT MECH	1	3
B-775014-00	NEEDLE, WEIGHT MECH	1	4
B-775027-00	STAND OFF, WEIGHT MECH	4	5
B-775018-00	LEVER WEIGHT MECH	1	6
B-777505-00	E - RING	4	7
B-777507-00	SHAFT, PIVOT WITH SLOT	1	8
B-777506-00	PIN, STRAP MOUNT	1	9
B-775024-00	PLATE, WEIGHT MECH	1	10
B-775038-00	SPACER MANIFOLD	4	11
B-775318-00	LOCKWASHER, #6 INTERNAL	4	12
B-775023-00	SPACER WEIGHT MECH, M	1	13
B-775022-00	SPRING, WEIGHT MECH	1	14
B-775021-00	PIN SPRING	1	15
B-775028-00	HITCH PIN, WEIGHT MECH, C1000	1	16
B-775011-SV	C1000 Contents Indicator Assembly	1	17
B-775097-00	STRAP, CARRYING, C1000	1	18

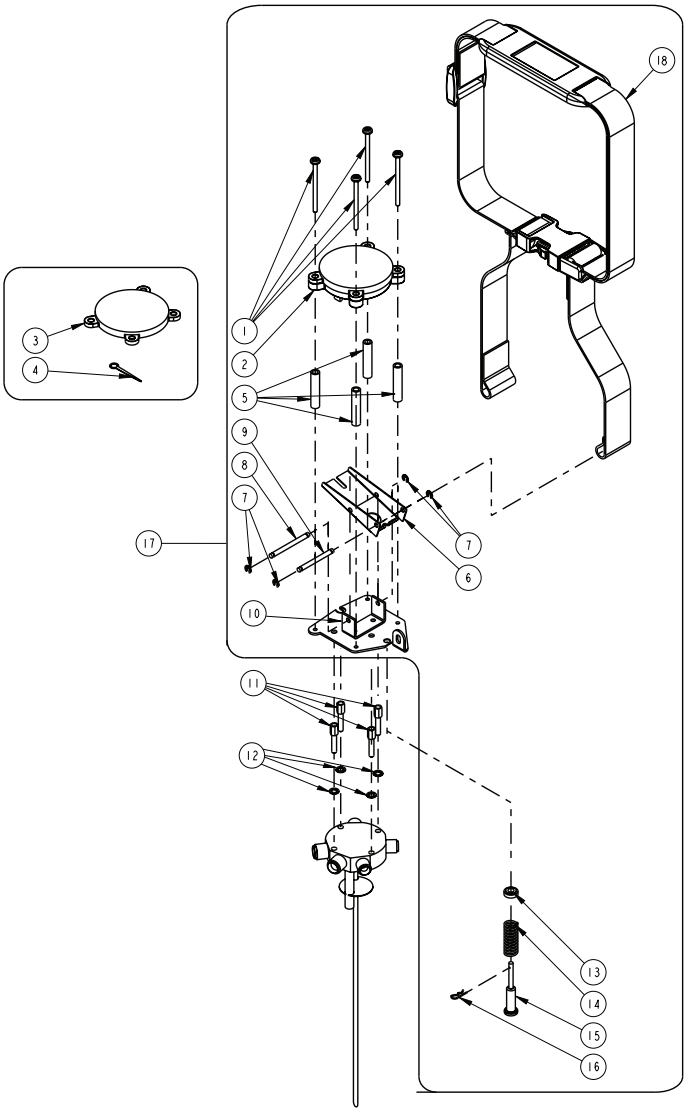

FIGURE 8: CONTENTS INDICATOR EXPLODED ASSEMBLY

Copyright © 2019. CAIRE Inc. reserves the right to discontinue its products, or change the prices, materials, equipment, quality, descriptions, specifications and/or processes to its products at any time without prior notice and with no further obligation or consequence. All rights not expressly stated herein are reserved by us, as applicable.